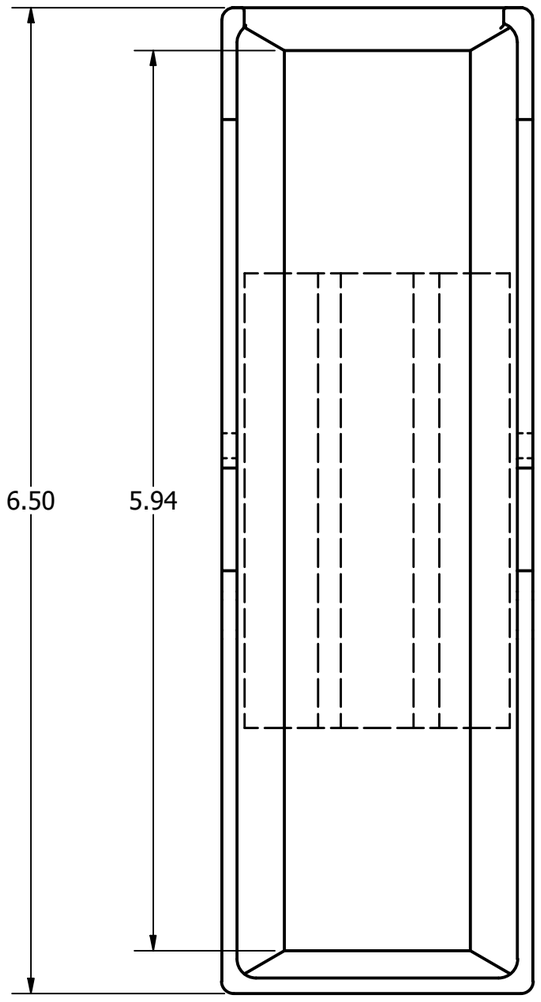
6.50
5.94

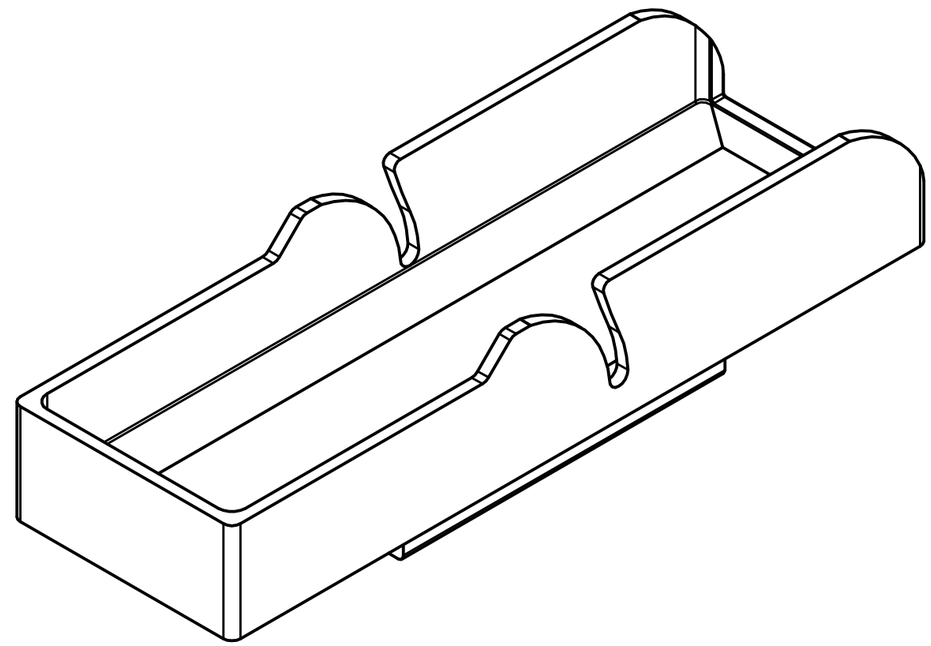

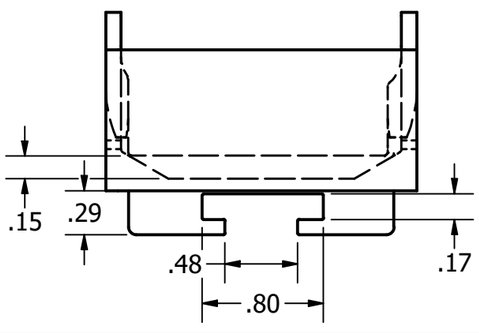
.15
.29
.48
.80
.17

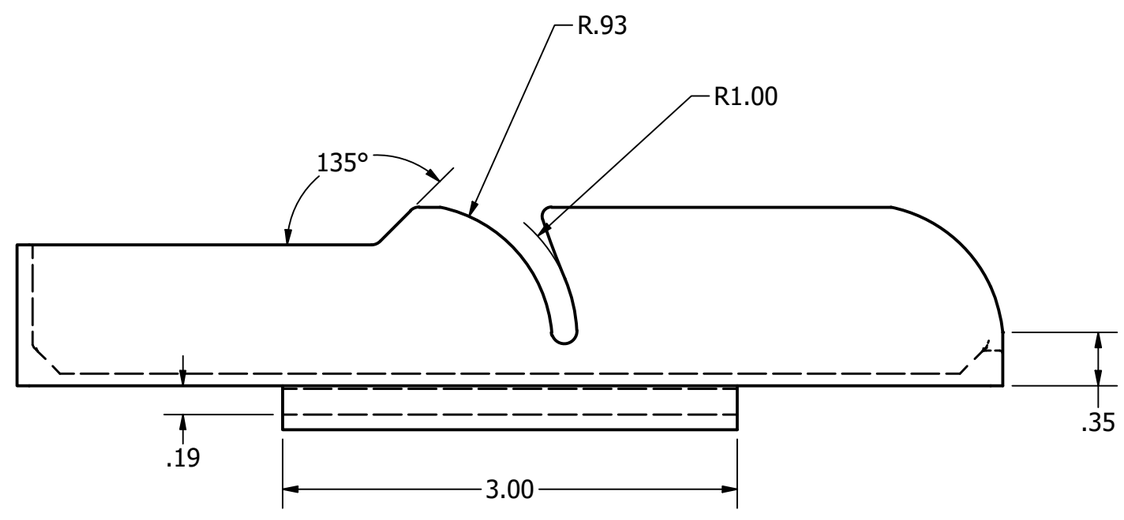
R.93
R1.00
135°
.19
3.00
.35